# NEW CUPRA RAVAL

**100% ELECTRIC**

# INDEX


06 ← **BEAUTY**
EXTERIOR STYLING
INTERIOR STYLING
COLOURS
WHEELS
INTERIOR AMBIENTS

**POWER** → 20
ELECTRIFYING PERFORMANCE
CHARGING SOLUTIONS

26 ← **INNOVATION**
PERFORMANCE
TECHNOLOGY
SAFETY
UPGRADES
CUSTOM CUPRA BY ABT
CUPRA CONNECT

**LEISURE** → 42
ACCESSORIES
CUPRA e-CARE
ENVIRONMENTAL
INFORMATION

54 ← **TECHNICALS**
STANDARD & OPTIONAL EQUIPMENT
ENGINE SPECS

DON’T SETTLE. DON’T BLEND IN. BE UNAPOLOGETICALLY YOURSELF—AND DRIVE A VEHICLE THAT PERFECTLY REFLECTS YOUR SPIRIT. STEP INTO AN AUTHENTIC, RAW EXPERIENCE POWERED BY CUPRA DNA AND A PURE URBAN ESSENCE, EMBODIED IN DARING PROPORTIONS AND COLOURS. THE NEW CUPRA RAVAL IS MORE THAN JUST A CAR; IT’S A 100% ELECTRIC DESIGN, FULL OF LIFE—CRAFTED TO DELIVER THRILLING PERFORMANCE AND AN ALLURING, DYNAMIC DRIVING EXPERIENCE. THIS ISN’T ABOUT STAYING INSIDE THE BOX. IT’S NOT ABOUT PERFECTION. THE CUPRA RAVAL IS BUILT TO TURN HEADS—MADE FOR THOSE WHO TAKE RISKS, WHO OWN THEIR ATTITUDE, AND WHO LIVE AND BREATHE THE RHYTHM OF THE CITY.

Our global range of cars and product specifications varies from country to country. Please, visit your local CUPRA website to know more about the product offer available for you.

# BEAUTY

Beauty can be observed, experienced, sensed, and taken for a ride. Beauty isn't about staying inside the lines or chasing perfection. It's about taking risks, standing out, and owning your raw edge. Just like the new CUPRA Raval—a rebellious design with electric performance that injects dynamism into every ride. Not just in the city, but wherever the road takes you. A bold, emotionally charged aesthetic crafted with striking colours and sculpted lines on the outside, and cutting-edge technology within. Built to command attention, built to make a statement. The perfect fusion of sophistication and contrast.

Our global range of cars and product specifications varies from country to country. Please, visit your local CUPRA website to know more about the product offer available for you.

# EXTERIOR STYLING

## CAPTIVATING VISUAL EXPERIENCE

The new CUPRA Raval dares to stand out—thanks to its bold TRI-LED feature. This distinctive headlight design amplifies the car's already striking presence, adding a layer of visual drama that's impossible to ignore. The MATRIX LED lights define the vehicle's audacious spirit and curated essence, with precision-crafted lines that speak of bold design and technical mastery. Take on the city streets and turn heads with a light signature that doesn't just illuminate—it captivates. A purely magnetic visual experience that elevates every drive.

Our global range of cars and product specifications varies from country to country. Please, visit your local CUPRA website to know more about the product offer available for you.

## SUBTLE BUT TRANSFORMATIVE

Built into the body, the flush door handle remain hidden when not in use, preserving the car's sculpted silhouette. They automatically deploy as you approach with the key—Physical or digital—or when you touch the surface, illuminating to welcome you with style and precision.

## UNMATCHED AND UNFORGETTABLE DESIGN

Command the path with confidence. Equipped with the widest tyres in its category, the new CUPRA Raval exudes strength and stability from the ground up. Their bold dimensions not only enhance its sturdy stance but also elevate driving performance. Paired with a rebel, functional and sophisticated design, it delivers an unmatched driving experience—where power meets precision.

# INTERIOR STYLING

## ALWAYS IN COMMAND

A driver-first design with seamless technology. The 10.25" Digital Cockpit puts key information—such as maps and essential functions—clearly in view and within easy reach, keeping you focused on the road. It's complemented by a 12.9" operating system powered by Android™, offering a new ecosystem of apps such as HBO or Netflix. Stay focused, enjoy ergonomic comfort and dynamism, and personalise your drive without ever taking your hands off the wheel.

Our global range of cars and product specifications varies from country to country. Please, visit your local CUPRA website to know more about the product offer available for you.

## SOPHISTICATION, DYNAMISM & COMFORT

The bucket seats blend uniqueness and sporty design with pure dynamism. They're electrically adjustable for both driver and passenger, with a memory function for added convenience. Crafted with sustainability in mind and finished with copper elements, they're an absolute win-win.

# COLOURS

NEW MANGANESE MATT[3]

NEW PLASMA[4]

MAGNETIC TECH[2]

MIDNIGHT BLACK[2]

GLACIAL WHITE[2]

FIORD BLUE[1]

CENTURY BRONZE MATT[3]

[1] Soft
[2] Metallic
[3] Matt
[4] Special

Our global range of cars and product specifications varies from country to country. Please, visit your local CUPRA website to know more about the product offer available for you.

# WHEELS

19" REBEL AHEAD[1]
VZ

19" ICON CUSTOM [2]
VZ

19" VANDAL
E

19" ICON
VZ

19" REBEL
VZ

Endurance E
Raval VZ VZ
Standard ■
Optional ■
[1] Only available in combination with AHEAD Interior
[2] Available with CUSTOM CUPRA

Our global range of cars and product specifications varies from country to country. Please, visit your local CUPRA website to know more about the product offer available for you.

19" MAVERICK
E

18" DEFIER
E

18" DEFIER MACHINED
E

17" RAVAL [1]

Endurance E
Raval VZ VZ
Standard ■
Optional ■
[1] Only available for fleets

Our global range of cars and product specifications varies from country to country. Please, visit your local CUPRA website to know more about the product offer available for you.

# INTERIOR AMBIENTS

**FEEL INTERIOR[1]**

Includes High interior, bucket seats with vegan leather upholstery, and electric driver and co-driver system with memory for driver.

E VZ

**AHEAD INTERIOR**

Features High interior, cup-bucket seats with 3D knitting upholstery, electric driver and co-driver system with memory for the driver, heated front seats with heated steering wheel, and 3D printing details in dashboard.

VZ

**IMMERSIVE INTERIOR**

Features High interior, bucket front seats with Dinamica® design, and electric driver and co-driver system with memory for driver.

E VZ

**PULSE INTERIOR**

Enhanced interior with sport seats, combining refined textile design and improved ergonomic support.

E

Endurance E
Raval VZ VZ
Standard ■
Optional ■

Our global range of cars and product specifications varies from country to country. Please, visit your local CUPRA website to know more about the product offer available for you.

# POWER

Power is electrifying performance, revolution, rebellion and daring to go outside the box with conviction. The new CUPRA Raval embodies all that. Driving it means embracing striking beauty, living and proudly celebrating every emotion during a journey, and exploring the innovation and advanced tech. Experience pure, raw and honest power with a car full of attitude and an alluring identity, built with precision to forge new paths and live new sensations.

Our global range of cars and product specifications varies from country to country. Please, visit your local CUPRA website to know more about the product offer available for you.

# ELECTRIFYING PERFORMANCE

The new CUPRA Raval brings a boost of power and top-tier performance to every ride.

## AGILITY TAKES OVER

Dynamism at its fullest. The sporty throttle response of the new Raval Endurance[1] enhances agility, delivering more power, reaching up to 211 HP. Enjoy heightened dynamism and responsiveness during overtaking manoeuvres and active driving. Powered by a 52 kWh NMC battery—designed for performance and efficiency—it offers an approximate range of 440 km[2], fast charging capabilities, and excellent cold-weather behaviour.

Our global range of cars and product specifications varies from country to country. Please, visit your local CUPRA website to know more about the product offer available for you.

## ENGINEERED FOR PRECISION

Elevated and fast, the Raval VZ version showcases an ultimate dynamism and performance, reaching up to 226 HP and accelerating from 0–100 km/h in just 6.8 seconds. This optimised design delivers a more precise steering, enhanced stability, improved grip during curves and reduced weight. Overall, it's a practical yet sophisticated version, built for high performance with features like the DCC (Dynamic Chassis Control), the ESC OFF mode, which allows you to deactivate stability control, or the eLSD (Electronic Slip Limited Differential), to provide an enhanced grip.

[1] Century Bronze colour not available until August 2026.
[2] Range available only with Label A tyres.

# CHARGING SOLUTIONS

POWER

## TOP UP ANYTIME, ANYWHERE

Stop. Recharge. Keep the rebellion alive. Move in new ways, uncover hidden corners of the city, and challenge every rule on the go. Discover the CUPRA charging through the My CUPRA App to live every ride with passion. With a 52 kWh battery and fast charging up to 105 kW (DC), you're always ready to roll. Plus, the Vehicle to Load (V2L) function lets you power external devices directly from your car, turning it into a portable energy source.

## PUBLIC CHARGING ACCESSIBILITY

Recharge your CUPRA Raval with ease through charging stations across urban hubs and suburban areas. With the My CUPRA app, you can control charging remotely, access real-time updates, and manage public chargers whenever you need them.

## HOME CHARGING SOLUTIONS

CUPRA's home charging solutions bring effortless control right to your fingertips. Use the My CUPRA app to manage charging remotely, monitor your home charger, and keep your CUPRA Raval primed for every journey ahead.

## CUPRA CHARGER 2

Charge your CUPRA Raval fast and seamlessly thanks to the CUPRA Charger Connect 2. This new Home Charging solution unlock the full potential of CUPRA Raval. It covers the maximum charging capacity and features smart functions that adapt to solar energy availability and electricity pricing—cutting costs by up to 40%.



Our global range of cars and product specifications varies from country to country. Please, visit your local CUPRA website to know more about the product offer available for you.

# INNOVATION

Break the mold. Challenge the status quo if your passion tells you so. Embrace change and don't be afraid to show what makes you unique. Just like our most radical take on the electric urban car: the new CUPRA Raval. A daring design, full of personality, crafted for those who refuse to blend in. The CUPRA Raval is the future of driving innovation—powered by cutting-edge technology and dynamic performance, so you can enjoy every second of the ride.

AI Generated.

Our global range of cars and product specifications varies from country to country. Please, visit your local CUPRA website to know more about the product offer available for you.

# PERFORMANCE

## LET THE MATRIX LEDS LEAD THE WAY

Matrix LED headlamps illuminate your path with advanced glare-free technology, keeping you and those around you safe.

## PRECISION AND PERFORMANCE

This optimised design delivers more precise steering, greater stability, improved cornering grip, and reduced weight. It now incorporates sporty steering knuckles, engineered with a stiffer, lighter, performance oriented geometry to enhance responsiveness. It's a practical setup built for high performance, featuring systems like DCC (Dynamic Chassis Control), ESC OFF for stability control deactivation, and the eLSD (Electronic Limited Slip Differential) for superior grip.

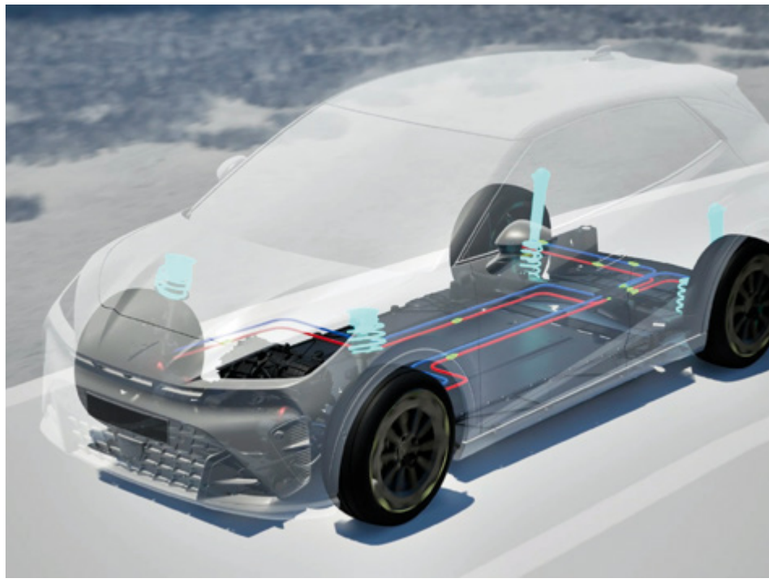

## LAUNCH CONTROL, PURE PRECISION

Experience the advanced Launch Control in your CUPRA Raval VZ, engineered to coordinate engine, traction, and transmission for instant, slip-free acceleration. Enhancing this feeling is the CUPRA Interior Sound, creating a sporty, immersive acoustic profile that amplifies the vehicle's dynamic character.



Our global range of cars and product specifications varies from country to country. Please, visit your local CUPRA website to know more about the product offer available for you.

# TECHNOLOGY

## NEXT-LEVEL SENSORY ATMOSPHERE

With Smartlight Next Gen orchestrating the experience, every journey becomes a more vivid, sensory moment behind the wheel. Immerse yourself in an elevated in cabin atmosphere, shaped by refined interior details, dynamic ambient lighting, expressive door projections, and the rich clarity of Sennheiser immersive sound system.

Our global range of cars and product specifications varies from country to country. Please, visit your local CUPRA website to know more about the product offer available for you.

## NEXT GEN, 360° VISION

The new CUPRA Raval features an advanced, next generation, top view camera system with 4 strategically placed cameras. They create a real-time overhead view of your car and its surroundings—making parking, tight spaces, and obstacle detection easier and safer. It also incorporates the Smart Parking Solution, featuring IPA (Intelligent Park Assist) and RPA (Remote Park Assist), adding convenience and confidence to every manoeuvre.

## POWER WHEREVER YOU NEED IT

Plug in and power your devices —even small appliances—with the new CUPRA Raval. Equipped with the Vehicle to Load (V2L) system and Vehicle-to-Home (V2H) functionality, it features electrical sockets that turn your vehicle into a standard device voltage power source—at home or on the go. Keep your accessories charged and ready for anything, wherever the road takes you.

# SAFETY

## YOUR PERSONAL TRAVEL ASSISTANT

Experience peace of mind while driving your CUPRA Raval thanks to the Travel Assist. This driving system always has your back behind the wheel, as it enhances the overall safety and comfort on the road with features like the Traffic Jam Assist, the Lane Assist and the Predictive Adaptive Cruise Control.

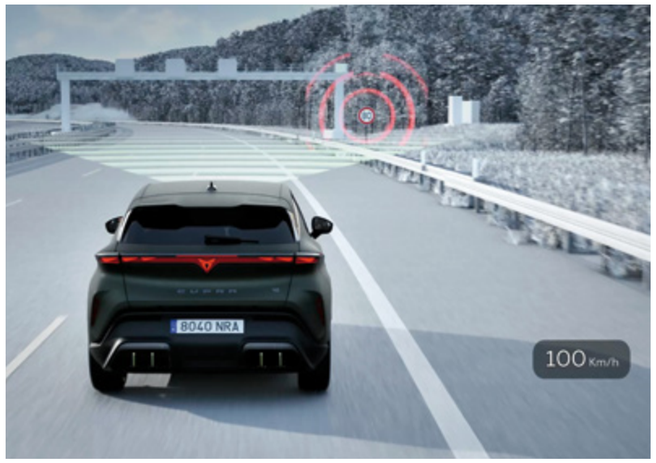

## YOUR NEW FAVOURITE COMPANION

Emergency Assist steps in when you're unable to. The new CUPRA Raval is packed with safety features, thanks to a built-in kit that includes a tiredness recognition solution, Front and Rear Assist, and a smart safety feature that monitors your activity. If it detects no response, takes control and alerts others, takes you to the roadside and unlocks the doors. A true safety net on wheels.

## SMART ALERTS FOR SAFER MOVES

Discover advanced assistance systems that monitor blind spots, rear traffic, and door-side exits—warning you of approaching vehicles, cyclists, or pedestrians to help prevent collisions when changing lanes, reversing, or opening a door.

## ANTI-THEFT PROTECTION. TOTAL PEACE ON MIND

Stay protected with a smart security setup that detects break-ins, interior movement, unauthorized towing, and reinforces warnings with a backup horn—always keeping you and your vehicle safe.

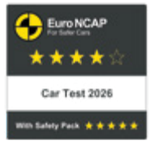


The CUPRA Raval has received Euro NCAP's safety rating 4 stars. When equipped with the Safety Pack, it achieves a 5-star rating.

Our global range of cars and product specifications varies from country to country. Please, visit your local CUPRA website to know more about the product offer available for you.

# UPGRADES

## EDGE

The EDGE system delivers a seamless 360° urban driving experience, thanks to features like illuminated flush door handles, anti-theft alarm, rear view camera, Front Park Distance Control, and Vehicle to Load. Also, you can unlock and start your car with just your phone—thanks to the advanced Mobile Digital Key.

## DRIVE

From stress-free parking to full visibility, advanced assist systems like Intelligent Park Assist, Remote Park Assist, and Top View Camera make every manoeuvre effortless for you—All these features are part of a pack that also includes Travel Assist 3.0, Exit Warning.

## LIGHT & SOUND

Live a fully Immersive experience thanks to dynamic ambient lighting and the dynamic door projections, rich Sennheiser immersive sound system and refined interior details. These features transform every drive into a sensory experience—led by Smartlight Next Gen and designed to elevate every moment on the road.

## REBEL PLUS[1]

This vibrant setup is elevated by Matrix LED lamps with lighting ceremonies, dynamic door projections, All-Weather function, and Light Assist. Comfort is further enhanced with power seat adjustment for both front seats, including a driver memory feature, delivering a refined and confident driving experience.

Our global range of cars and product specifications varies from country to country. Please, visit your local CUPRA website to know more about the product offer available for you.

[1] Only availbale for VZ.

# UPGRADES

## EXTERIOR LIGHT

Light your way without dazzling other drivers. The Exterior Light system includes features such as the Light Assist, which automatically detects ambient light and traffic conditions using a front camera to switch the lights on or off accordingly. It works in tandem with the Matrix LED to dim the light beam when other vehicles are nearby, ensuring safer and more considerate driving.

## PANORAMIC SUNROOF

Bathe in the sun with the new CUPRA Raval's Panoramic Sunroof paired with an electrically adjustable interior sunblind that lets you set the level of openness. Let the light in, feel the vibe of a sophisticated, free design and own every ride.

## WINTER PACK

The Winter Pack features a heat pump, front heated seats with individual control for both the driver and the passenger, and a heated steering wheel to warm your hands. Pure comfort made for colder days.

## TOWING HOOK

Pack it all in — bikes, bags, surfboards… you name it. Check out the towing hook for CUPRA Raval, designed to be resistant, functional, and versatile. Whether you're heading out for a weekend adventure or tackling a challenging journey, it can handle it all: up to 1,200 kg with 52 kWh battery and 500 kg with 37 kWh, making it the reliable companion your car can count on for anything.

Our global range of cars and product specifications varies from country to country. Please, visit your local CUPRA website to know more about the product offer available for you.

# CUSTOM
# CUPRA BY ABT

## UPGRADED PRESENCE

Amplify the rebel spirit of your CUPRA Raval with this upgrade developed in collaboration with ABT. This comprehensive pack sharpens the car's aesthetics with details like the CUPRA logo in Dark Chrome, while distinctive aero design elements complete the look and reinforce its dynamic character.

## A SHARPER LOOK

Enhance every journey and stand out with this comprehensive design pack featuring aero-design elements. The sharp front splitter sets the tone, while the sculpted side skirt creates a lower visual stance. The aggressive rear spoiler and the rear splitter complete this commanding look.

## 19" CUSTOM ALLOY WHEELS

The multi-spoke design of these exclusive CUSTOM 19-inch alloy wheels is elevated by a commanding Sport Black Matt finish to bring a unique, daring edge to the car's presence while enhancing driving dynamics.

Our global range of cars and product specifications varies from country to country. Please, visit your local CUPRA website to know more about the product offer available for you.

# CUPRA CONNECT

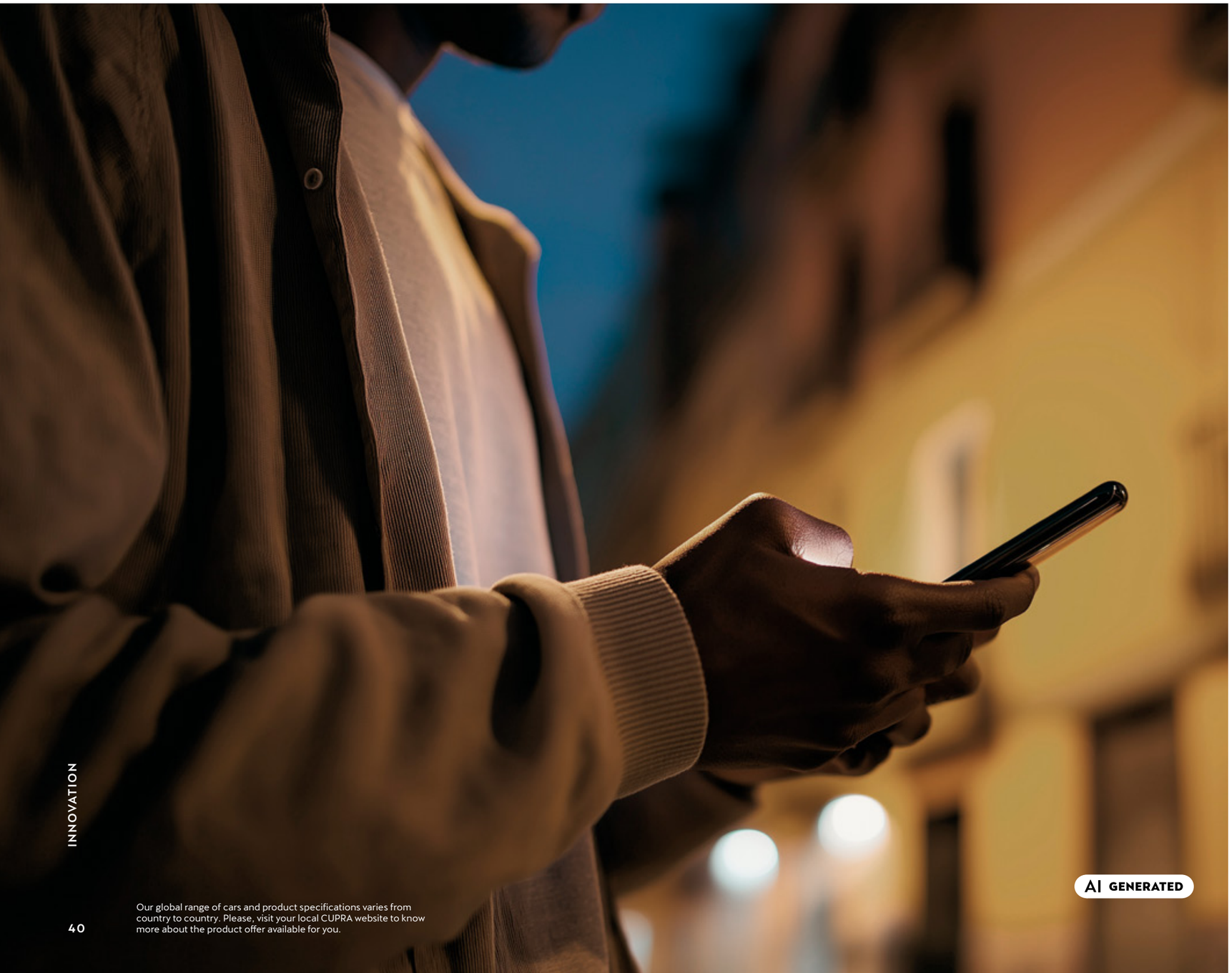


Our global range of cars and product specifications varies from country to country. Please, visit your local CUPRA website to know more about the product offer available for you.

Enjoy advanced navigation and seamless content access on the road with My CUPRA App. Benefit from remote connectivity and enhanced security—making every ride in your CUPRA Raval smarter and safer.

## MY CUPRA APP

Use the My CUPRA App to stay connected to your CUPRA Raval. Remotely check the status of your doors, windows, and lights, lock or unlock your car, track its location, or book service appointments—all from your phone.

## DRIVE SMART

Your CUPRA's infotainment system is your digital hub, built on an advanced operating system with a new powered store ecosystem. It keeps you connected, informed, entertained, and in control of key functions. Enjoy an intuitive touchscreen with smart routing, safety alerts, voice control and seamless software updates. Access your favourite apps through the CUPRA Apps Store, use the My CUPRA Apple Carplay™ with Full Link, and turn your smartphone into CUPRA Mobile Digital Key to unlock, start and lock your car.

## CUPRA MOBILE DIGITAL KEY

Your smartphone can now function as a Mobile Digital Key: unlock the car as you approach, lock it as you walk away, start the engine, and share access securely. Manage your Mobile Digital Key through your phone wallet after activating it via the My CUPRA App. The package also includes a Smart Card to temporarily grant access to someone else.

## MY CUPRA IN APPLE CAR PLAY

Enjoy infotainment functions within Apple CarPlay™, with quick and easy access. Designed for users who use Apple CarPlay™ as their main interface, it offers a personalised environment with effortless control of audio, temperature and lighting, as well as access to your contacts, key driving information and much more. Activate everything quickly through the My CUPRA App.

## CUPRA APPS STORE

Get a selection of in-car applications directly on your infotainment display and enjoy a truly curated connected-driving experience. Enjoy effortless connectivity with ready-to-use apps, convenient charging, a personalized interface tailored to your preferences, and plenty of entertainment and information services on the go.

# LEISURE

Discover a curated selection of accessories specially designed for the CUPRA Raval and experience leisure in full swing. Every journey becomes an opportunity to feel new emotions and create perfect memories. Take the wheel and drive — while taking care of every detail.

Our global range of cars and product specifications varies from country to country. Please, visit your local CUPRA website to know more about the product offer available for you.

# ACCESSORIES

## ROOF BARS

Easily set up these roof bars on your Raval and carry all your adventure essentials — bikes, skis, and more.

## ROOF BOX

This roof box, crafted from durable yet lightweight materials, adds extra storage capacity to your CUPRA Raval so you can carry everything you need to be adventure-ready.

## BIKE RACK

Choose your adventure and don't let anything hold you back. Effortlessly attach this bike rack, specially designed to fit your CUPRA Raval, and enjoy the path ahead — whether inside or outside the car.

## SKI RACK

Head to the slopes with total peace of mind. This rack lets you carry all your essentials for a snowy adventure with ease while keeping everything protected.

## EXTENDER SKI RACK

Load and unload your ski gear smoothly every time you need it. This Extender ski rack, designed to fit your CUPRA Raval perfectly, is the ideal solution for all your winter adventures.

Our global range of cars and product specifications varies from country to country. Please, visit your local CUPRA website to know more about the product offer available for you.

# ACCESSORIES

## PULSE/IMMERSIVE FLOOR MATS

Crafted for your CUPRA Raval, these Pulse/Immersive Premium floor mats will protect the interior ride after ride.

## TPE FLOOR MATS

The all-weather TPE floor mats add an exclusive touch to your Raval, while keeping the interior looking newer for longer.

## FEEL FLOOR MATS

Crafted to keep everything pristine, the Premium floor mats Skin/Feel combine stylish design with a outstanding functionality.

## AHEAD FLOOR MATS

Discover the Premium floor mats Hero/ Ahead, specially design to reliably keep the interior of your Raval in pristine condition.

Our global range of cars and product specifications varies from country to country. Please, visit your local CUPRA website to know more about the product offer available for you.

# ACCESSORIES

## CHILD SEAT

Comfort and safety go hand in hand with this child seat. Available for children between 15 months to 12 years, this ergonomic design is easy to set up and comes with adjustable headrests.

## CAR COVER

Safeguard your CUPRA Raval with this convenient car cover, specifically designed to keep dirt and dust away from your vehicle.

## FRONT AND REAR MUDFLAPS

The front and rear mudflaps add an outstanding protection, keeping the dirt and debris away from your Raval in every adventure.

## SEMIRIGID BOOT TRAY

Speacially adapted to fit your Raval's luggage compartment while protecting it ride after ride.

Our global range of cars and product specifications varies from country to country. Please, visit your local CUPRA website to know more about the product offer available for you.

# CUPRA e-CARE*

Our exclusive e-CARE packages have your back on every ride —optimizing performance, protecting your car, and helping you create thrilling adventures. With tailored support that keeps your CUPRA Raval in top conditions, you can follow your passions worry-free, while enjoying a bold yet reliable drive.

## SMALL PACKAGE

Small but mighty. This package is perfect for those who want to keep their CUPRA Raval in top conditions but seek an essential servicing.

## MEDIUM PACKAGE

Whether you're an avid explorer or a frequent long-distance driver, this package delivers everything from essential coverage to extended warranty and roadside assistance to keep you moving confidently.

## LARGE PACKAGE

Enjoy an even greater level of peace of mind with the Large package—featuring Tyre Replacement, Full Maintenance, and Insurance, plus the Small and Medium benefits.

* e-CARE services may differ according to market.

## WARRANTY EXTENSION. EXTRA PEACE OF MIND

Extend your peace of mind with this warranty extension—adding 3 more years or up to 100,000 km of coverage for your CUPRA Raval.

## CUPRA ROADSIDE ASSISTANCE

Enjoy 2 years of free, complete assistance for your CUPRA Raval. Anytime, anywhere. In the EU and beyond.

## SUPPORT THAT NEVES SLEEPS

Drive peacefully with complete CUPRA Insurance. Get courtesy cars for major incidents, 24-hour support and reliable repair services.

Our global range of cars and product specifications varies from country to country. Please, visit your local CUPRA website to know more about the product offer available for you.

# ENVIRONMENTAL INFORMATION

## DRIVE PROFILE

This allows the customer to choose between different driving profiles that will change vehicle's behaviour. One of these profiles is the RANGE, which, among other actions, adjusts the climate control and changes the propulsion parameters to reduce energy consumption.

## EXTEND BATTERY LIFE

By limiting the maximum SOC% (State of charge) of the high voltage battery to 80%. This function prevents the vehicle from being parked with a high charge level, thereby reducing battery degradation, maximum range and extending battery life.

Post-climatization: extends the battery life by regulating its temperature below 38°C, if the charging level is above 80% for better storage.

## LIGHTING

Headlamps and rear lamps are 100% LED, increasing life service by up to 10 times. For headlamps, the luminous flux effectiveness is increased at least 30% in comparison to a halogen lamp.

## RECYCLED MATERIALS

Carpets contain a minimum of 43% recycled nylon ECONYL® yarn (nylon from discarded fishing nets and textile fibers from disposed carpets).

Seats Ahead configuration: The CUP bucket seats with full 3D-knitted upholstery are made from 100% recycled material.

3DKnitting technology results in a 100% waste reduction, as the exact same material is used for the part to be produced.

Seat Pulse configuration: the fabrics in the central part of the front and rear lateral seats area contain 100% recycled material.

Seat Immersive configuration: the fabrics in the back rest part and head rest seats areas contain 73% Dinamica®. The central area of rear lateral seats contains 100% recycled material.

Seat Feel configuration: the fabrics in head rest parts and central parts of the front seats as well as the central parts of the rear lateral seats contain at least 36% recycled material.

## ECO-ASSIST

While driving manually with Comfort or Range driving profiles, when a foreseen event or a moving object ahead is detected, the ECO-Assist function enhances efficiency and comfort during deceleration by continuously determining the ideal coasting and/or automatic energy recuperation strategy. In certain situations, the function provides the driver with a visual event indication to lift their foot off the accelerator pedal, and if the driver reacts, the function takes over the anticipated deceleration based on the distance to the event. Driving with ECO-Assist function active saves energy and increases range.

SEAT S.A.'s environmental mission.
Protect Climate. Conserve Resources. Preserve Ecosystems. Ensure Environmental Compliance.



Our global range of cars and product specifications varies from country to country. Please, visit your local CUPRA website to know more about the product offer available for you.

# TECHNICALS

Discover the soul of precision engineering and pure CUPRA DNA. Each technical specification reveals our obsession with detail —from hybrid efficiency and raw presence to electrified power that flows effortlessly with the road. The exhilarating CUPRA Raval performance transcends numbers. It's a fusion of innovation and emotion, where electric energy meets conscious, rebellious, and urban design. Every element is purposefully crafted to amplify your drive and awaken your spirit.

AI Generated.



Our global range of cars and product specifications varies from country to country. Please, visit your local CUPRA website to know more about the product offer available for you.

# STANDARD & OPTIONAL EQUIPMENT

▼ Standard
▽ Optional
– Not available

## ASSISTANTS & SAFETY

| | PLUS | ENDURANCE | VZ |
|---|---|---|---|
| Tyre pressure monitoring system | ▼ | ▼ | ▼ |
| 3-point seat belts in front with pretensioner | ▼ | ▼ | ▼ |
| Visual and acoustic seat belt reminder, electric contact in front and rear | ▼ | ▼ | ▼ |
| Dimming interior rear view mirror | ▼ | ▼ | – |
| Breakaway interior rearview mirror, auto-dimming | – | ▽ | ▼ |
| Travel Assist 3.0 | ▽ | ▽ | ▽ |
| Intelligent Park Assist | ▽ | ▽ | ▽ |
| Remote Park Assist | ▽ | ▽ | ▽ |
| Top View Camera 360° | ▽ | ▽ | ▽ |

Our global range of cars and product specifications varies from country to country. Please, visit your local CUPRA website to know more about the product offer available for you.





▼ Standard
▽ Optional
– Not available

## ASSISTANTS & SAFETY

| | PLUS | ENDURANCE | VZ |
|---|---|---|---|
| Emergency Assist 3.6 | ▽ | ▽ | ▽ |
| eLSD (Electronic Slip Limited Differential) | – | – | ▼ |
| Anti-theft alarm system, interior monitoring, backup horn, and towing protection | – | – | ▼ |
| Private E-call | ▽ | ▽ | ▽ |
| Airbag on driver and front passenger side, with front passenger airbag deactivation | ▼ | ▼ | ▼ |
| Forward collision warning with warning and braking reaction to vehicles, pedestrians and cyclists | ▼ | ▼ | ▼ |
| Exit Warning and Rear Traffic Alert (Side Assist included) | ▼ | ▼ | ▼ |
| Emergency steering support with turn assist | ▼ | ▼ | ▼ |
| Traffic sign recognition | ▼ | ▼ | ▼ |
| Pre-Crash | – | – | ▼ |

▼ Standard
▽ Optional
– Not available

EQUIPMENT

# EXTERIOR

| | PLUS | ENDURANCE | VZ |
|---|---|---|---|
| 18" DEFIER MACHINED | ▼ | ▽ | – |
| 18" DEFIER | ▽ | ▼ | – |
| 19" REBEL [1] | – | – | ▼ |
| 19" ICON [1, 2] | – | – | ▽ |
| 19" REBEL AHEAD | – | – | ▽ |
| 19" VANDAL | ▽ | ▽ | ▽ |
| 19" ICON CUSTOM [3] | ▽ | ▽ | ▽ |
| 19" MAVERICK | ▽ | ▽ | – |
| All season tyres for 18" DEFIER MACHINED Alloy Wheels | ▽ | ▽ | – |
| All season tyres for 18" DEFIER Alloy Wheels | ▽ | ▽ | – |
| Performance tires for Raval VZ | – | – | ▽ |
| Range tires VZ [4] | – | – | ▽ |

[1] Not available until September 2026.
[2] Only available in combination with ahead interior.
[3] Available with CUSTOM PACK by ABT for VZ and VZ Ahead.
[4] Not compatible with Fleet Packs.

Our global range of cars and product specifications varies from country to country. Please, visit your local CUPRA website to know more about the product offer available for you.



▼ Standard
▽ Optional
– Not available

EQUIPMENT

EXTERIOR

| | PLUS | ENDURANCE | VZ |
|---|---|---|---|
| Dark tinted windows | ▽ | ▽ | ▼ |
| Bi-color roof [5] | ▽ | ▽ | ▽ |
| Panoramic sunroof | ▽ | ▽ | ▽ |
| 3D Rear Lights with illuminated logo | ▼ | ▼ | ▼ |
| Matrix Led | ▽ | ▽ | ▽ |
| Exterior mirrors, power-adjustable, separately heated, memory and lowering function | ▽ | ▼ | ▼ |
| Welcome light on mirrors | ▼ | ▼ | ▼ |
| Towing Hook preinstallation [6] | ▽ | ▽ | ▽ |
| Towing Hook [7] | ▽ | ▽ | ▽ |

[5] Not available for Manganese Green Matt & Century Bronze Matt colours.
[6] Not compatible with Towing Hook.
[7] Not compatible with Towing Hook preinstallation.

▼ Standard
▽ Optional
– Not available

EQUIPMENT

# INTERIOR

| | PLUS | ENDURANCE | VZ |
|---|---|---|---|
| CUPRA leather-wrapped multi-function steering wheel with satellites & paddes | - | ▼ | ▼ |
| Reading lights in front and rear | ▼ | ▼ | ▼ |
| Smart Light Next Gen | ▽ | ▽ | ▽ |
| Ambient Light | - | ▽ | ▽ |
| Climatronic 2-zone | ▼ | ▽ | ▼ |
| Climatronic 1-zone | ▼ | ▼ | - |
| Sun visors with mirror illuminated and with airbag label on sun visor and B-pillar | ▼ | ▼ | ▼ |
| Split folding rear seats | ▼ | ▼ | ▼ |
| Child seat anchors for child seat system i-Size, 2x top tether and child seat anchors in passenger side | ▼ | ▼ | ▼ |

Our global range of cars and product specifications varies from country to country. Please, visit your local CUPRA website to know more about the product offer available for you.



▼ Standard
▽ Optional
– Not available

EQUIPMENT

INTERIOR

| | PLUS | ENDURANCE | VZ |
|---|---|---|---|
| **IMMERSIVE Interior:**<br>- Bucket seats in Dinamica®<br>- Power seat adjustment and memory feature (memory only for driver)<br>- Exterior mirrors with memory feature, power-folding adjustable and separately heated<br>- Pneumatically adjustable lumbar support on both sides<br>- Headrest integrated | ▽ | ▼ | ▽ |
| **IMMERSIVE Interio:**<br>- Bucket seats in Dinamica®<br>- Exterior mirrors with memory feature, power-folding adjustable and separately heated<br>- Pneumatically adjustable lumbar support on both sides<br>- Headrest integrated | ▽ | ▽ | x |
| **FEEL Interior[8]:**<br>- Bucket seats in Vegan Leather<br>- Power seat adjustment and memory feature (memory only for driver)<br>- Exterior mirrors with memory feature, power-folding adjustable and separately heated.<br>- Pneumatically adjustable lumbar support on both sides<br>- Headrest integrated | ▽ | ▽ | ▽ |
| **AHEAD Interior[9]:**<br>- Heated steering wheel in sulfur and logo in dark chrome<br>- Front seats heated<br>- CUP Bucket seats with 3D knitting<br>- Ahead specific dashboard<br>- Power seat adjustment and memory feature (memory only for driver)<br>- Exterior mirrors with memory feature, power-folding adjustable and separately heated<br>- Pneumatically adjustable lumbar support on both sides<br>- Headrest integrated | - | - | ▽ |
| **PULSE Interior:**<br>- Door and side trim panel in PVC<br>- Manual Seat adjustment<br>- Sport Seats covers in woven fabric<br>- Split folding rear seats | ▼ | ▼ | - |

[8] Not compatible with Immersive Interior & Ahead Pack. Not available until July 2026.
[9] Only available with 19" REBEL AHEAD Wheels. Not compatible with Immersive Interior.

▼ Standard
▽ Optional
– Not available

EQUIPMENT

# TECHNOLOGY

| | PLUS | ENDURANCE | VZ |
|---|---|---|---|
| Keyless Advanced | ▽ | ▽ | ▼ |
| Keyless-Go (central locking system) | ▼ | ▼ | – |
| 12.9" Display | ▼ | ▼ | ▼ |
| Full Link | ▼ | ▼ | ▼ |
| 7 speakers in front | ▼ | ▼ | ▼ |
| Sennheiser immersive sound system | ▽ | ▽ | ▽ |
| Voice control | ▼ | ▼ | ▼ |
| CUPRA CONNECT | ▼ | ▼ | ▼ |
| Navigation System | ▽ | ▽ | ▽ |
| Dataplan extension from 72GB to 180 GB over a 3-year period | ▽ | ▽ | ▽ |
| Dataplan extension from 72GB to 120 GB shifting from a 3-year period to a 5-year period | ▽ | ▽ | ▽ |
| Dataplan extension from 72GB to 300 GB shifting from a 3-year period to a 5-year period | ▽ | ▽ | ▽ |

Our global range of cars and product specifications varies from country to country. Please, visit your local CUPRA website to know more about the product offer available for you.



▼ Standard
▽ Optional
– Not available

EQUIPMENT

TECHNOLOGY

| | PLUS | ENDURANCE | VZ |
|---|---|---|---|
| Park distance control (front & rear)[10] | ▽ | ▽ | ▼ |
| Rear View Camera | ▽ | ▽ | ▼ |
| Predictive Adaptive Cruise Control and speed limiter | ▼ | ▼ | ▼ |
| **Winter Pack Lite:**<br>- Heated front seats<br>- Heated steering wheel | – | ▽ | ▽ |
| **Winter Pack:**<br>- Heated seats front<br>- Heat Pump<br>- Heated steering wheel | – | ▽ | ▽ |
| Windshield wiper intermittent control with light & rain sensor | ▼ | ▼ | ▼ |
| Heat-reflecting windshield | ▼ | ▼ | ▼ |
| **MODE 2 Charging Cable** (10 A) | ▽ | ▽ | ▽ |
| **MODE 3 Charging Cable** (16 A or 32 A) | ▽ | ▽ | ▽ |

[10] Also available for Endurance battery with rear sensors only.

▼ Standard
▽ Optional
– Not available

EQUIPMENT

# UPGRADES

| | PLUS | ENDURANCE | VZ |
|---|---|---|---|
| **EDGE:**<br>- Phone wireless charging (15W)<br>- 2 front & 2 rear USB Type-C ports (90W)<br>- Kessy Advanced<br>- Flush door handles with exterior illumination<br>- Mobile Digital Key<br>- Anti-theft alarm system with interior monitoring, backup horn and towing protection<br>- Climatronic 2-zone<br>- Breakaway interior rear-view mirror, auto-dimming<br>- Rear View Camera<br>- Park Distance Control (front & rear)<br>- Double floor (Varibo)<br>- 1 Physical Key fob<br>- Vehicle-to-load | ▽ | ▽ | ▼ |
| **DRIVE:** [11]<br>- Travel Assist 3.0: Semi-autonomous driving system, traffic jam assist and Emergency assist<br>- Intelligent park assist<br>- Remote park assist<br>- Top View Camera | ▽ | ▽ | ▽ |
| **LIGHT & SOUND:** [11]<br>- Smart Light Next Gen (includes ambient light plus)<br>- Dynamic door projections<br>- Door and side trim panel in PVC<br>- Sennheiser immersive sound system | ▽ | ▽ | ▽ |
| **REBEL PLUS**<br>- Smart Light Next Gen (includes ambient light plus)<br>- Dynamic door projections<br>- Iluminated logo<br>- Matrix LED lamps with ceremonies<br>- All weather function (included in Matrix LED)<br>- Light Assist<br>- Power seat adjustment for both front seats with memory feature (memory only in driver)<br>- Exterior mirrors with memory feature, power-folding adjustable and separately heated | - | - | ▽ |
| **LIGHT & SOUND for REBEL PLUS:** [12]<br>- Sennheiser immersive sound system | - | – | ▽ |
| **EXTERIOR LIGHT:** [13]<br>- Matrix LED lamps with ceremonies<br>- All weather function (included in Matrix LED)<br>- Light Assist<br>- Smart Light Next Gen | ▽ | ▽ | ▽ |

[11] Requires Edge pack.
[12] Requires Rebel Plus pack.
[13] Requires Edge pack. Not compatible with Drive pack (with High Beam Control).

Our global range of cars and product specifications varies from country to country. Please, visit your local CUPRA website to know more about the product offer available for you.



▼ Standard
▽ Optional
– Not available

EQUIPMENT

# OTHERS

| | PLUS | ENDURANCE | VZ |
|---|---|---|---|
| Extra key [11] | ▽ | ▽ | ▽ |

# ACCESSORIES



## TRANSPORT

| | REFERENCE |
|---|---|
| Roof bars | 6FA071151 |
| Roof box | 000071200AQ |
| Tow bar (only for bikes) | 6FA092160 |
| Ski rack for 6 pairs or 4 snowboards | 000071129T |
| Ski rack for 4 pairs or 2 snowboards | 000071129S |
| Extendable ski & snowboard rack | 000071129R |
| Bike rack | 5F9071128 |

## PROTECTION

| | REFERENCE |
|---|---|
| CUPRA Floor Mats (Pulse/Immersive) - LHD | 6FA863011B LOE |
| CUPRA Floor Mats (Pulse/Immersive) - RHD | 6FB863011B LOE |
| CUPRA Floor Mats (Skin/Feel) - LHD | 6FA863011A LOE |
| CUPRA Floor Mats (Skin/Feel) - RHD | 6FB863011A LOE |
| CUPRA Floor Mats (HERO/AHEAD) - LHD | 6FA863011 LOE |
| CUPRA Floor Mats (HERO/AHEAD) - RHD | 6FB863011 LOE |
| TPE Floor mats - LHD | 6FA061500 041 |
| Semirigid boot tray | 6FA061201A |
| Reversible boot tray | 6FA061201 |
| Front Mudflaps | 6FA075111 |
| Rear Mudflaps | 6FA075101 |
| Car cover | 6H3061701C |

Our global range of cars and product specifications varies from country to country. Please, visit your local CUPRA website to know more about the product offer available for you.

# SAFETY

| | REFERENCE |
|---|---|
| Utility kit CUPRA (flashlight + vest + first aid kit) | 6H3093990AD |
| Utility kit CUPRA (1 mini triangle + vest + first aid kit) | 6H3093990AC |
| Reflective jacket | 000093900SA |
| Emergency beacon light (DGT) (only Spain) | 000052122H |
| KIDFIX i-Size (100-150 cm) | 000019906AK |





# CONNECTIVITY /E-MOBILITY

| | REFERENCE |
|---|---|
| Kit of Charging cable (Mode 2) EU | 000054412AQ |
| Kit of Charging cable (Mode 2) FIN, FRA | 000054412AS |
| Kit of Charging cable (Mode 2) DEN | 000054412BC |
| Kit of Charging cable (Mode 2) CHE | 000054412AT |
| Kit of Charging cable (Mode 2) GBR, CYP, IRL,MAL,GIB | 000054412BA |
| Kit of Charging cable (Mode 2) NOR | 000054412AR |
| Kit of Charging cable (Mode 2) ISR | 000054412BK |
| Kit of Charging cable (Mode 2) AUS | 000054412BJ |
| Kit of Charging cable (Mode 3) 3Ph 16A | 000054412BD |
| Kit of Charging cable (Mode 3) 3Ph 32A | 000054412BE |
| V2L Adapter - Typ2 Typ G (UK) | 000054412 CS |
| V2L Adapter - Typ2 - CEED1P116A (camping) | 000054412 DA |
| V2L Adapter – Typ2,F,C,L (EU) | 000054412 CT |
| CUPRA Cable 3 in 1 | 000051444AR |

Our global range of cars and product specifications varies from country to country. Please, visit your local CUPRA website to know more about the product offer available for you.

# ENGINE SPECS

## GENERAL INFORMATION

| | BATTERY 38.5 KWH<br>133 PS (HP) - 99 KW |
|---|---|
| Acceleration (0-50 km/h) | 3.5 |
| Acceleration (0-100 km/h) | 9.5 |
| Maximum power (kW/HP) | 99 kW (133 HP) |
| Electric range max-min (km) | 328 - 305 |

## DRIVETRAIN

| | |
|---|---|
| Max torque (Nm) | 264 |

[1] Estimated value considering a charge between 10% and 80% using a 88 kW DC for the 37 kWh battery package. The charging time of your vehicle may vary due to multiple factors, including but not limited to weather conditions, the age, and the condition of the battery. Accordingly, the charging time provided should not be interpreted as an exact measurement, but rather as a general estimate. This information is for guidance purposes only and does not constitute a guarantee of charging performance.

* The accurate range for your vehicle will vary according to a number of different factors which include the route, weather conditions, vehicle load (occupants + luggage), battery age and condition, optional equipment (alloys, tyres, etc.), the use of peripheral energy consumption systems such as heating, air conditioning and heated seats, as well as your driving style. The indicated range has been calculated in compliance with the WLTP standards, which set out test conditions applicable to all car manufacturers to ensure the comparability of these tests for all vehicles.

** The technical data displayed are merely indicative and may vary. The available power (KW) and acceleration of the vehicle depends on the battery charge level and its temperature at all times. The pictures are used for illustrative and informational purposes only and may not correspond to the series production.





## BATTERY

| | BATTERY 38.5 KWH<br>133 PS (HP) - 99 KW |
|---|---|
| Battery type | BATTYPV105 |
| Battery capacity (kWh) | 37 kWh / 38.5 kWh |
| Battery voltage | 327 V |
| Charging time (AC 7 kW) | - |
| Charging time (AC 11 kW) | 4h |
| Charging time (DC 50 kW) | - |
| Charging time (DC 88 kW) [1] | 0:23 |
| Charging time (DC 105 kW) | - |
| Charging time (DC 120 kW) | - |
| Charging time (DC 165 kW) | - |
| Charging time (DC 175 kW) | Not apply |
| Charging time (DC 183 kW) | Not apply |
| Charging time 100km range/100 kW | - |
| Charging time 100km range/170 kW | - |

## ELECTRIC CONSUMPTION

| | |
|---|---|
| Electric consumption combined WLTP (kWh/100 km) | 13.8 - 15 |
| Combined range WLTP max-min (km) | 328 - 305 |
| $CO_2$-Emissions (g/km) | 0 |

Our global range of cars and product specifications varies from country to country. Please, visit your local CUPRA website to know more about the product offer available for you.

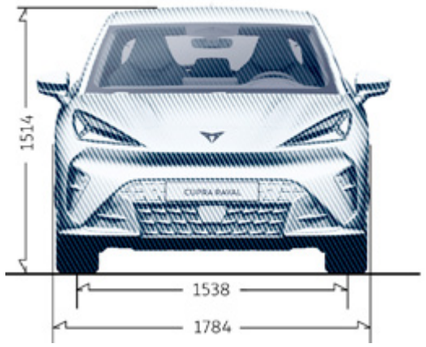


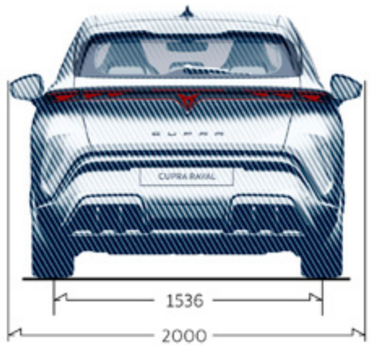


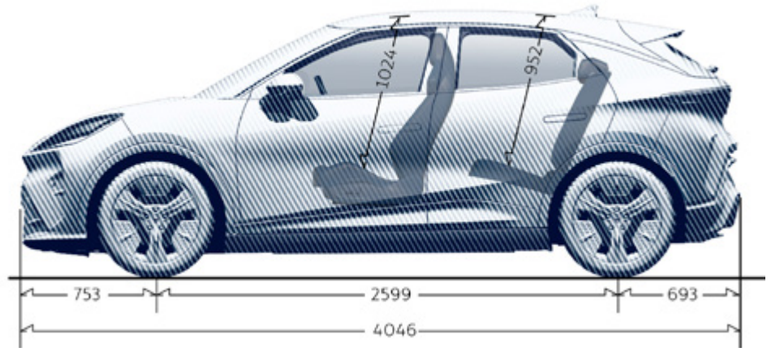


## CHASSIS

| | BATTERY 38.5 KWH<br>133 PS (HP) - 99 KW |
|---|---|
| Front suspension | Independent type McPherson - coil springs - hydraulic shock absorber<br>DCC equipment (Adaptive chassis control) |
| Rear suspension | Semirigid axle - coil springs - hydraulic shock absorber<br>DCC equipment (Adaptive chassis control) |

## STEERING

| | |
|---|---|
| Steering system | R-EPS (Rack Electric Power System); Progressive steering |
| Turning Circle Diameter (m) | 10.9m |

## BRAKES

| | BATTERY 38.5 KWH<br>133 PS (HP) - 99 KW |
|---|---|
| Brake system | One Box ( ESC + Brake Booster) |
| Front/Rear brakes type | Front ventilated disc brakes and rear solid disc brakes |
| Front disc brakes (mm) | 306×26 |
| Rear disc brakes (mm) | 300×12 |

## WEIGHTS

| | |
|---|---|
| Length (mm) | 4046 |
| Width (mm) | 1784 |
| Height (mm) | 1514 |
| Boot capacity (litres) | 441 L |
| Weight (Kg) | 1610 |
| Seats | 5 |

Our global range of cars and product specifications varies from country to country. Please, visit your local CUPRA website to know more about the product offer available for you.

# ENGINE SPECS

## GENERAL INFORMATION

| | BATTERY 52 KWH 211 PS (HP) - 155 KW | BATTERY 52 KWH 226 PS (HP)[1] - 166 KW |
|---|---|---|
| Acceleration (0-50 km/h) | 3.1 | 3.1 |
| Acceleration (0-100 km/h) | 7.1 | 6.8 |
| Maximum power (kW/HP) | 155 kW (211 HP) | 166 kW (226 HP) |
| Electric range max-min (km) | 446-413 | 440[2]-379 |

## DRIVETRAIN

| | | |
|---|---|---|
| Max torque (Nm) | 290 | 290 |

[1] Please note that VZ (52 kW) will be available from week 20/26.
[2] Range available only with Label A tyres.
[3] Estimated value considering a charge between 10% and 80% using a 105 kW DC for the 52 kWh battery package. The charging time of your vehicle may vary due to multiple factors, including but not limited to weather conditions, the age, and the condition of the battery. Accordingly, the charging time provided should not be interpreted as an exact measurement, but rather as a general estimate. This information is for guidance purposes only and does not constitute a guarantee of charging performance.

* The accurate range for your vehicle will vary according to a number of different factors which include the route, weather conditions, vehicle load (occupants + luggage), battery age and condition, optional equipment (alloys, tyres, etc.), the use of peripheral energy consumption systems such as heating, air conditioning and heated seats, as well as your driving style. The indicated range has been calculated in compliance with the WLTP standards, which set out test conditions applicable to all car manufacturers to ensure the comparability of these tests for all vehicles.

** The technical data displayed are merely indicative and may vary. The available power (KW) and acceleration of the vehicle depends on the battery charge level and its temperature at all times. The pictures are used for illustrative and informational purposes only and may not correspond to the series production.





## BATTERY

| | BATTERY 52 KWH 211 PS (HP) - 155 KW | BATTERY 52 KWH 226 PS (HP)[1] - 166 KW |
|---|---|---|
| Battery type | BATTYPV105 | BATTYPV105 |
| Battery capacity (kWh) | 51.5 kWh / 55 kWh | 51.5 kWh / 55 kWh |
| Battery voltage | 240-408 V | 240-408 V |
| Charging time (AC 7 kW) | - | - |
| Charging time (AC 11 kW) | 5h 30min | 5h 30min |
| Charging time (DC 50 kW)[3] | - | - |
| Charging time (DC 105 kW) | 0:24 | 0:24 |
| Charging time (DC 120 kW) | - | - |
| Charging time (DC 165 kW) | - | - |
| Charging time (DC 175 kW) | Not apply | Not apply |
| Charging time (DC 183 kW) | Not apply | Not apply |
| Charging time 100km range/100 kW | - | - |
| Charging time 100km range/170 kW | - | - |

## ELECTRIC CONSUMPTION

| | | |
|---|---|---|
| Electric consumption combined WLTP (kWh/100 km) | 13.6 - 14.8 | 13.6 - 16.2 |
| Combined range WLTP max-min (km) | 446 - 413 | 440 - 379 |
| $CO_2$-Emissions (g/km) | 0 | 0 |

Our global range of cars and product specifications varies from country to country. Please, visit your local CUPRA website to know more about the product offer available for you.

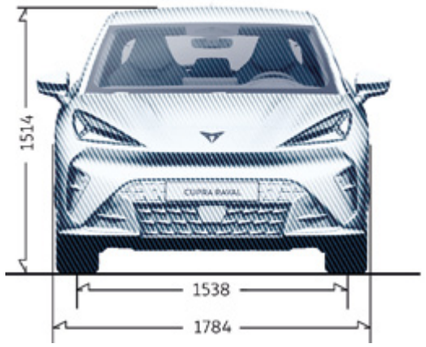


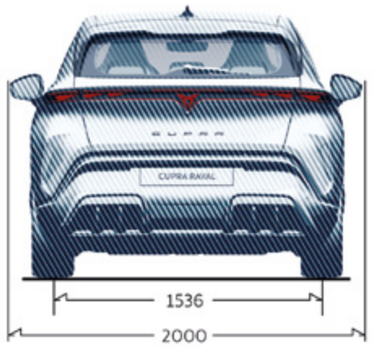


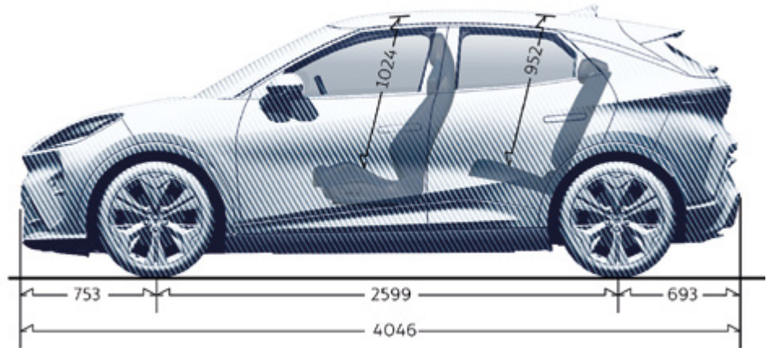


## CHASSIS

| | BATTERY 52 KWH<br>211 PS (HP) - 155 KW | BATTERY 52 KWH<br>226 PS (HP)[1] - 166 KW |
|---|---|---|
| Front suspension | Independent type McPherson - coil springs - hydraulic shock absorber<br>DCC equipment (Adaptive chassis control) | |
| Rear suspension | Semirigid axle - coil springs - hydraulic shock absorber<br>DCC equipment (Adaptive chassis control) | |

## STEERING

| | | |
|---|---|---|
| Steering system | R-EPS (Rack Electric Power System); Progressive steering | |
| Turning Circle Diameter (m) | 10.9m | 11m |

## BRAKES

| | BATTERY 52 KWH<br>211 PS (HP) - 155 KW | BATTERY 52 KWH<br>226 PS (HP)[1] - 166 KW |
|---|---|---|
| Brake system | One Box ( ESC + Brake Booster) | One Box ( ESC + Brake Booster) |
| Front/Rear brakes type | Front ventilated disc brakes and rear solid disc brakes | |
| Front disc brakes (mm) | 306x26 | 306x26 |
| Rear disc brakes (mm) | 300×12 | 300×12 |

## WEIGHTS

| | | |
|---|---|---|
| Length (mm) | 4046 | 4046 |
| Width (mm) | 1784 | 1784 |
| Height (mm) | 1514 | 1514 |
| Boot capacity (litres) | 441 L | 441 L |
| Weight (Kg) | 1610 | 1610 |
| Seats | 5 | 5 |

Our global range of cars and product specifications varies from country to country. Please, visit your local CUPRA website to know more about the product offer available for you.

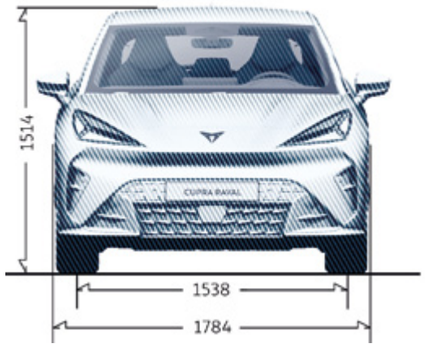


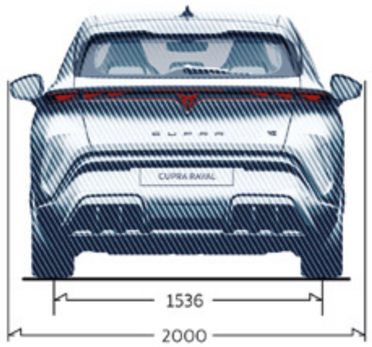


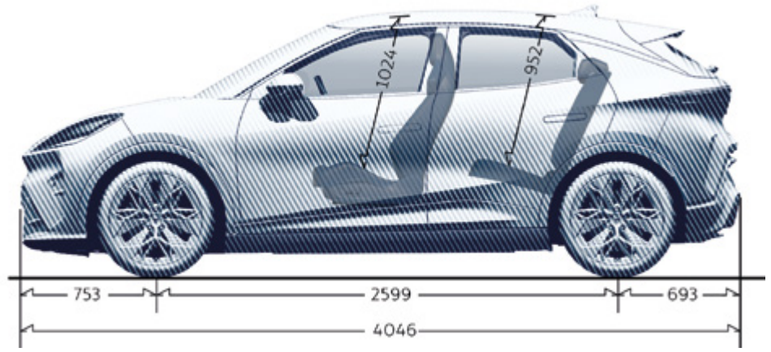


## CHASSIS

| | BATTERY 52 KWH<br>211 PS (HP) - 155 KW | BATTERY 52 KWH<br>226 PS (HP)[1] - 166 KW |
|---|---|---|
| Front suspension | Independent type McPherson - coil springs - hydraulic shock absorber<br>DCC equipment (Adaptive chassis control) | |
| Rear suspension | Semirigid axle - coil springs - hydraulic shock absorber<br>DCC equipment (Adaptive chassis control) | |

## STEERING

| | | |
|---|---|---|
| Steering system | R-EPS (Rack Electric Power System); Progressive steering | |
| Turning Circle Diameter (m) | 10.9m | 11m |

## BRAKES

| | BATTERY 52 KWH<br>211 PS (HP) - 155 KW | BATTERY 52 KWH<br>226 PS (HP)[1] - 166 KW |
|---|---|---|
| Brake system | One Box ( ESC + Brake Booster) | One Box ( ESC + Brake Booster) |
| Front/Rear brakes type | Front ventilated disc brakes and rear solid disc brakes | |
| Front disc brakes (mm) | 306x26 | 306x26 |
| Rear disc brakes (mm) | 300×12 | 300×12 |

## WEIGHTS

| | | |
|---|---|---|
| Length (mm) | 4046 | 4046 |
| Width (mm) | 1784 | 1784 |
| Height (mm) | 1514 | 1514 |
| Boot capacity (litres) | 441 L | 441 L |
| Weight (Kg) | 1610 | 1610 |
| Seats | 5 | 5 |

Our global range of cars and product specifications varies from country to country. Please, visit your local CUPRA website to know more about the product offer available for you.

CUPRAOFFICIAL.COM

CUPRA is committed to a policy of continuous product development and reserves the right to make changes to specifications, colours and prices without notice. The information in this brochure can therefore be given as guidance only. While CUPRA makes every effort to ensure that specifications are accurate at the time of publication, you should always check with your authorised CUPRA Partner for the latest information. Due to limitations of the printing process the colours reproduced in thisbrochure may vary slightly from the actual paint colour and material — 09/2026.

Printed in Spain.